6V_2214_75_HTV_AP_240X159_(MT5596)_v0.5_20210712

PART	COLOUR	TECHNIQUE	CHANGES / REMARKS	V
I PHILIPS LOGO	Pantone 877c	SILKSCREEN PRINTING	ON HIGH GLOSS SURFACE	00
J TRIGGER AREA		IRPOLISED	ON POLISHED SURFACE	00
K ALL TEXTS, ICON AND CAUTION LABELS		ENGRAVED	ENGRAVED 0.1 (DEPTH 0.3 MM)	00

LABEL DOWN IO TEXT FONTS: CentraleSansCnd Bold 10pt

LABEL SIDE IO TEXT FONTS: CentraleSansCnd Bold 10pt

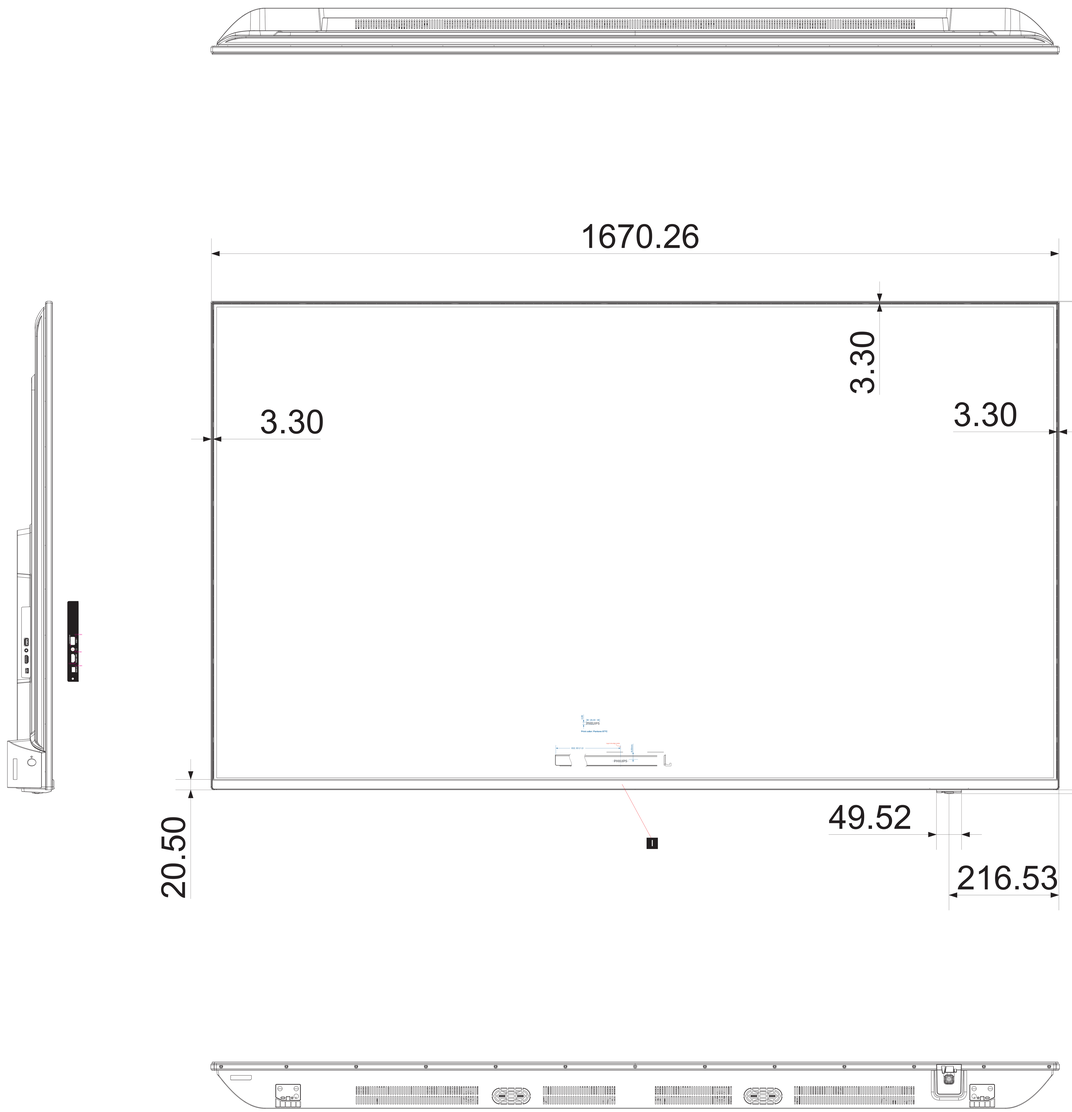

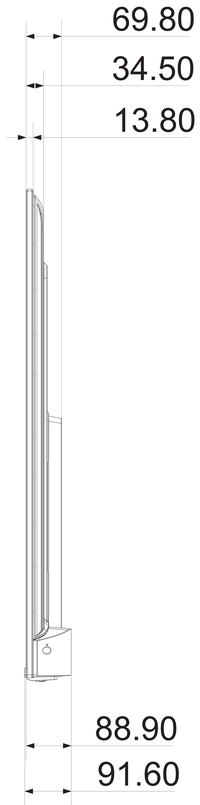

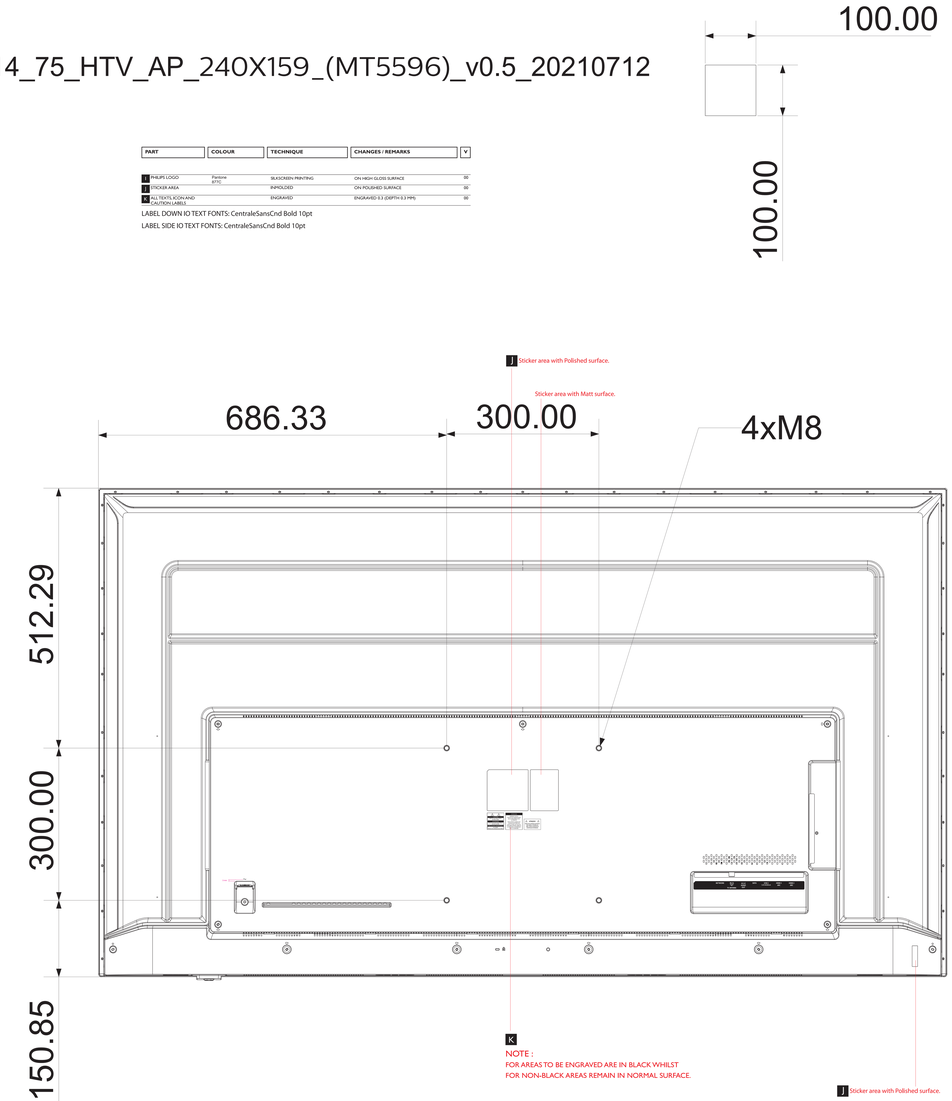

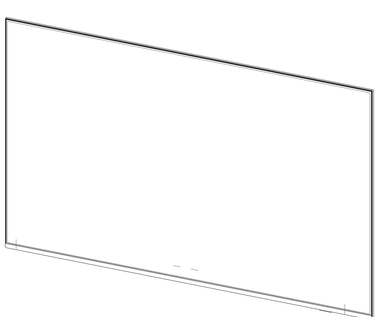

SCALE 0.500

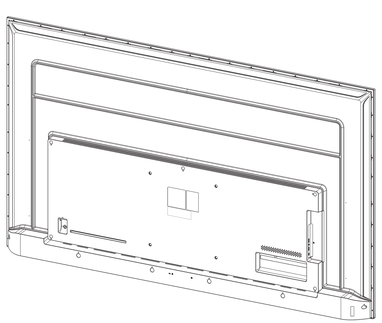

SCALE 0.500